ANIMAL BEHAVIOUR, 2008, 76, 187–199
doi:10.1016/j.anbehav.2008.01.020

Available online at www.sciencedirect.com
ScienceDirect

Kin-biased social behaviour in wild adult female white-faced capuchins, *Cebus capucinus*

SUSAN PERRY*†, JOSEPH H. MANSON*†, LAURA MUNIZ†, JULIE GROS-LOUIS‡ & LINDA VIGILANT†

*Department of Anthropology and Center for Behavior, Evolution and Culture, University of California, Los Angeles
†Max Planck Institute for Evolutionary Anthropology
‡Department of Psychology, Indiana University

(Received 16 October 2007; initial acceptance 30 October 2007; final acceptance 4 January 2008; published online 27 May 2008; MS. number: A10889R)

Studies of kin bias in the distribution of social behaviour in group-living matrifocal species generally underline the importance of bonds among female kin. However, few studies examine either how kin bias may be affected by variation in the availability of kin or the relevance of paternal kin. In this study, we used genetic and behavioural data to analyse correlates of coalition formation, proximity, grooming and dominance relations among female white-faced capuchins over a 10-year period during which the number of adult females in the group varied from 6 to 10. Females sided with the most closely related of two opponents when joining coalitions. Both dominance rank and kinship influenced proximity and grooming patterns. In particular, when group size was small, mean relatedness high and interdyadic variation in relatedness low, rank distance was a better predictor of proximity and grooming than was kinship distance. However, when group size was large, mean relatedness lower and interdyadic variation in relatedness higher, females significantly biased their grooming and spatial proximity towards kin. Dominance rank was not so tightly associated with relatedness as in provisioned female-bonded cercopithecines; females did not follow the 'youngest sister ascendancy rule'. Full sisters, maternal half sisters and mother–daughter dyads associated at statistically indistinguishable rates, and all associated significantly more often than paternal half sisters. Paternal half sisters did not associate more often than distantly related female–female dyads ($r < 0.125$). These and similar results call into question the general importance of paternal kin ties in wild primates.

© 2008 The Association for the Study of Animal Behaviour. Published by Elsevier Ltd. All rights reserved.

Keywords: altruism; *Cebus capucinus*; genotyping; kinship; maternal kin; paternal kin; white-faced capuchin

Kin-biased social behaviour occurs in rodents (Sherman 1977; Mateo 2002), carnivores (Holekamp et al. 1997; Wahaj et al. 2004), ungulates (Heitor et al. 2006) and primates (reviewed in: Gouzoules & Gouzoules 1987; Bernstein 1991; Silk 2002; Chapais & Berman 2004). Motivated by inclusive fitness theory (Hamilton 1964), researchers have examined whether and how genetic kinship affects the distributions of putatively cooperative and/or affiliative behaviours (e.g. spatial proximity, grooming, coalitionary support, allomaternal care and reconciliation) as well as competitive behaviour such as aggression. Nonhuman primates have figured prominently in these research programmes, largely because most primates (1) have complex social lives (de Waal & Tyack 2003) and (2) live in stable social groups containing kin of various kinds (Gouzoules & Gouzoules 1987; Silk 2002). Several important questions remain unresolved in this area.

First, what are the limits of nepotism? Chapais et al. (1997, 2001) found that female Japanese macaques, *Macaca fuscata*, do not favour collateral maternal kin with values of $r < 0.25$ (half sisters) or lineal kin with values of $r < 0.125$ (greatgrandmother to greatgranddaughter). Furthermore, when dominance rank distance is strongly associated

Correspondence: S. Perry, Department of Anthropology, University of California, Los Angeles, CA 90095-1553, U.S.A. (email: sperry@anthro.ucla.edu).

0003–3472/08/$34.00/0
© 2008 The Association for the Study of Animal Behaviour. Published by Elsevier Ltd. All rights reserved.

with kinship distance, it may be difficult to determine the relative effects on social relationships of (1) competition for access to higher-ranking social partners (Seyfarth 1977) and (2) nepotism (Chapais 2001; see also de Waal 1991; Kapsalis & Berman 1996a).

Second, how do demographic factors affect the relationship between kinship and social behaviour? For example, when matrilines are large, females' limited social time will be largely consumed by interactions with close kin, leading to a steep decline in altruistic interactions beyond the closest kinship categories (Chapais & Bélisle 2004). High survival and reproductive rates in provisioned populations may increase the availability of female allies and thereby produce the widely documented 'younger sister ascendency rule' by which each female acquires a dominance rank below her mother and above her older sisters (Datta & Beauchamp 1991). In wild populations with low survival rates, females lacking close maternal kin may compensate by forming close bonds with paternal half sisters or even nonkin (Silk et al. 2006).

Third, in groups in which females are philopatric and mate promiscuously, do individuals discriminate in favour of paternal kin? After failures (Sackett & Frederickson 1987; Erhart et al. 1997) to replicate Wu et al.'s (1980) demonstration of recognition among previously unfamiliar paternal half siblings in pigtailed macaques, *Macaca nemestrina*, a consensus emerged (Rendall 2004) that primates use only prior familiarity (largely a function of maternal kinship), and not phenotype matching (Holmes & Sherman 1982), as a cue of genetic relatedness. More recent work, using genetic paternity assessment in wild or free-ranging populations, has produced mixed results (Alberts 1999; Widdig et al. 2001, 2002, 2006; Smith et al. 2003; Chapais 2006; Silk et al. 2006; Charpentier et al. 2007) regarding whether females or juveniles treat their paternal half siblings differently from more distant kin. If alpha males monopolize reproduction during fairly short tenures, age proximity could be a reliable cue of paternal kinship (Altmann 1979).

Finally, studies of kin-biased social behaviour in primates are taxonomically limited: most research has been conducted on terrestrial or semi-terrestrial cercopithecine monkeys. Although easy to observe, these species may not be typical primates in their social traits (Strier 1994; Di Fiore & Rendall 1994), including female philopatry and the strength of kinship's effects on social behaviour.

We used demographic, genetic and behavioural data to examine the effects of maternal and paternal kinship on proximity, grooming, coalitional support and dominance rank among wild female white-faced capuchins. Females of this species are philopatric whereas males disperse (Fedigan 1993; Jack & Fedigan 2004). Females form linear dominance hierarchies (Perry 1996), but their stability varies between study sites (Manson et al. 1999), as do the tendencies for (1) more closely ranked females to groom each other more than distantly ranked females and (2) frequent grooming partners to support each other preferentially in aggressive coalitions. No research has examined effects of paternal kinship on the social behaviour of female New World monkeys. The role of maternal kinship in influencing these patterns has also not been systematically assessed, and there is some suggestion that maternal kinship is not consistently important. In wild wedge-capped capuchins, *C. olivaceus*, matrilineal inheritance of female dominance rank is restricted to high-ranking individuals, and mother–daughter pairs do not always form close grooming relationships; rather, high grooming rates consistently characterize adjacently ranked dyads (O'Brien 1993a, b; O'Brien & Robinson 1993).

METHODS

Study Species and Site

Here we report results from a group (Abby's group; Perry 1996) of habituated white-faced capuchins residing in Lomas Barbudal Biological Reserve, Costa Rica, and on nearby public and privately owned land (10°29–32′N, 85°21–24′W). The area consists largely of highly seasonal tropical dry deciduous forest traversed by several permanent streams (Frankie et al. 1988). We habituated the group in 1990. Observations were conducted during three months in 1990, 22 months during 1991–1993, 6 months in three separate visits between February 1994 and August 1996, during at least half of each calendar year (approximately December–August) between December 1996 and August 2000, and continuously since January 2001. Adults and large juveniles were easily identified by scars, hair colour patterns and facial contours. Small juveniles were marked with Clairol Born Blonde hair dye (Clairol Corp., Stamford, CT, U.S.A.), squirted at their backs from a distance of 1–2 m with a 100 cc syringe from which we had removed the needle. This procedure never produced noticeable distress in the subjects. The study group contained 6–10 adult females, 2–6 adult males and 5–27 immatures over the course of the study, increasing steadily in size from 13 to 41 individuals before fissioning in 2003.

Demographic Records

Particularly for the early years of the study, exact dates of births, deaths, immigrations and emigrations were not always known. Ages of immature individuals that were not seen as neonates were estimated using physical and behavioural developmental schedules described in published sources (MacKinnon 2002; Fragaszy et al. 2004), as well as our own experience gathered during the course of the study. Conception dates were backdated 160 days from birthdates (Hartwig 1996; Corradini et al. 1998). Those females whose first 1–5 years of life were not observed, but whose first parturitions were observed, were assigned a birth year 6.2 years before their first parturition, using the mean observed age of first parturition of females ($N = 13$, range 5.5–7.1 years) whose birthdates were known. When males entered or disappeared from social groups during breaks between observation periods, they were regarded during genetic analysis as possible sires of infants conceived during the break.

Behavioural Observations, Behavioural Definitions and Analysis

Data adequate to reliably measure adult female–female social relationships were collected on 12 adult females during four observation periods: May 1991–May 1993 (six females, 604 h of focal individual observations, mean ± SD = 100.6 ± 25.8 h, range 48–113 h; collected by S.P., J.M., J.G.L. and Laura Sirot), February–June 1997 (8 females, 123 h; 15 ± 10 h, range 4–29.7 h, collected by J.M.), February–August 1999 (8 females, 27 h; mean 3.3 ± 0.5 h, range 2.5–4.0 h, collected by S.P. and J.G.L.) and February–July 2001 (10 females, 202 h; 20.2 ± 4.8 h, range 10.5–24.7 h; collected by S.P., J.M., J. Anderson and H. Gilkenson). During the 1991–1993, 1997 and 1999 observation periods, we conducted 10 min focal individual follows of adult females. During the 2001 observation period, we attempted to conduct all-day focal individual follows. When using both the 10 min and all-day follows, we rotated the identities of subjects to ensure unbiased sampling of individuals. When conducting the 10 min follows, we used the following sampling rules to avoid double-counting social interactions sampled in the previous follow or selecting those animals that were simply easiest to follow: (1) all study subjects but one were followed before the next round was begun, and a reasonable effort (about 30 min) was made to search for each monkey before it could be assumed that an individual was not with the group; (2) the next focal could not have interacted with the previous focal within 2.5 min; (3) the next focal could not be within five body lengths of the previous focal at the end of the previous follow, and (4) the researcher had to select the first animal that met these criteria for each focal sample. In all study periods, we recorded all social interactions of focal subjects, and their time of occurrence on a continuous basis, although only durations of grooming were reliably recorded to the nearest second in all field seasons. In 1991–1993, 1999 and 2001, but not in 1997, we recorded subjects' activities and proximities to conspecifics at 2.5 min intervals on an instantaneous basis (point samples). In 1997, we recorded approaches and leaves to the nearest second in the continuous data and used these data to calculate time spent in proximity. In 1991–1993, 1999 and 2001, pairs of observers collected data, and interobserver reliability was established as described by Perry (1995). In 1997, one observer collected all data.

Grooming was defined as one monkey manipulating the skin or hair of another monkey, either with the hands or with the mouth. We calculated dyadic grooming rates by dividing the number of seconds during which a dyad groomed (combining grooming in both directions) by the sum of the two monkeys' focal observation time during that field season. We measured proximity using, as a metric, the length from nose to tail base of an adult male capuchin (approximately 40 cm; K. Glander, personal communication). During all but one season (1997), we recorded the identities of those monkeys within one body length of the focal subject during point samples. In 1997, when we did not record point samples, we calculated time spent within one body length for each dyad using the exact durations between approaches and leaves. Aggression included both mild forms of aggression (e.g. supplants, open-mouth threats) and severe aggression (physical contact aggression and chasing). Because aggression tended to be temporally clumped in long sequences lasting several minutes, we analysed it as bouts rather than interactions, with each bout separated by at least 10 min during which no aggressive interaction occurred. Coalitional behaviour, defined as joint aggression by two or more individuals against a third party, included (minimally) joint facial or vocal threats towards the same target. Coalitions usually involved body contact between the coalition partners, such as an embrace, cheek-to-cheek posture, or 'overlord' posture, in which one monkey lies on the other's back and clasps its hands around the bottom monkey's chest so that their heads are stacked one on top of the other (='double threat': Oppenheimer & Oppenheimer 1973; Fedigan 1993). It was usually possible to distinguish between the individual that solicited coalitionary aid and the one that joined in directing aggression towards the victim (Perry 1996).

We assessed dominance relationships using the direction of dyadic avoidance and cowering (in 1991–1993 and 1997) and these interactions plus other unidirectional fear responses (in 2001). Data recorded during both focal and ad libitum observation were used in the assessment of dominance ranks. If all instances (or the vast majority) of submissive behaviour went in a single direction (i.e. if A was submissive to B but B was not submissive to A), then we assumed that B was dominant to A. Because capuchin females typically show unidirectional submissive responses in dyadic contexts and have transitive hierarchies, it is usually possible to arrange submission matrices such that all zeros are on one side of the diagonal and all nonzero values are on the other side of the diagonal. We were able to determine adult female dominance ranks in the 1991–1993, 1997 and 2001 observation periods (Perry 1996; Manson et al. 1999). There were two dyads with unresolved ranks (due to no observations of spontaneous submission) in the 1997 data set, and these were assigned tied ranks for the purpose of analysis. Analysis of female–female dominance interactions in 2001 showed a fairly strong fit to a linear hierarchy (Landau's $h' = 0.50$, $P = 0.13$, directional consistency index = 1.00). Transitivity was demonstrated in the 1991–1993 field season using Appleby's test of linearity (Perry 1996). During the 1999 observation period, we observed only seven female–female dominance interactions, and were unable to ascertain the dominance hierarchy. Sample sizes were too small to include the 1999 data set in analysis of patterns of aggression. Additional information about the construction of dominance hierarchies can be found in Perry (1996) and Manson et al. (1999).

For further details on behavioural sampling and behavioural definitions, see Perry (1996) and Manson et al. (2005).

Genetic Sample Collection and Analysis

Faecal samples were collected from 172 members of the five study groups at Lomas Barbudal, including all adult individuals observed in Abby's group since 1990. Most

relevant to this study were the 12 females born prior to 1995 in Abby's group and the seven adult and subadult males resident in the group from commencement of the study in 1990 until 1994, when the youngest adult female was conceived. Having information from the other groups enabled us to draw firmer conclusions about the kinship structure that would not have been possible had we looked at just one group, because it provided more extensive information on allele frequencies for this population. Furthermore, analysis of additional groups confirmed that the genetic structure observed in Abby's group is representative of other groups in the population, where the majority of adult females tend to be closely related (unpublished data).

Genomic DNA from 172 individuals belonging to the study population was extracted using the QIAamp DNA Stool Mini Kit (Qiagen Inc., Valencia, CA, U.S.A.) as previously described in Nsubuga et al. (2004). Complete genotypes at 18 microsatellite markers were obtained for all monkeys by analysing amplification products with an ABI PRISM3100 automated sequencer and Genescan (Applied Biosystems, Inc., Foster City, CA, U.S.A.) software as described in Muniz et al. (2006, supplementary information). Individuals were genotyped from multiple samples to guard against errors arising from sample mix-ups or individual misidentification, and genotyping errors were avoided through extensive repetition of results following the approach described in Morin et al. (2001).

Maternity checks were performed by including all group females older than 5 years at time of conception as potential mothers. All female–offspring pairs with zero mismatches across all loci, as well as female–offspring pairs with one mismatch who behaved as mother–offspring (i.e. showed much nursing and carrying), were included in the subsequent paternity analysis, so that each of these offspring could be associated with different females and analysed multiple times. We performed likelihood-based paternity assignments using Cervus 2.0 (Marshall et al. 1998). All group males were tested as potential sires, and the youngest male to unequivocally sire offspring was 7.8 years of age. Paternities were assigned to the resident male with the highest likelihood score, except in rare instances when the highest-scoring male was the sibling of the offspring in question. No mismatches were allowed for mother–father–offspring trios.

The mean observed heterozygosity across loci was 0.619, and there was no significant deviation from Hardy–Weinberg equilibrium. The average exclusionary power of the 18 loci was 0.9888 for assigning one parent when no parent was known and 0.9998 for second parent assignments.

Recent work has shown that microsatellite data sets of adequate power to elucidate parentage relationships do not necessarily provide reliable estimates of other dyadic familial relationships (Csilléry et al. 2006; but see Langergraber et al. 2007). Hence, we used the genetic data to conduct paternity and maternity analyses that, in combination with behavioural and demographic data, were then used to construct a pedigree of the study group.

For the residents in Abby's group when the study began in 1990, a combination of behavioural, demographic and genetic data made it possible in most cases to determine which of the zero mismatch pairs (i.e. those pairs sharing at least one allele at each of the 18 loci) were mother–daughter pairs and which were full sibling pairs. But there was some ambiguity regarding the positions of the oldest females (AA, SS, W, TT) in the genealogy, and we also lacked information about the paternity of those four females. We regarded SS and W as probable daughters of AA, rather than her siblings, because their physical characteristics (such as age spots, darkness and fluffiness of brows and nipple length) indicated that they were similar in age to one another and far younger than AA. Also, there were zero mismatches across all loci for the AA–SS and AA–W dyads, and 86% of the 65 zero mismatch dyads in our sample for which we knew the position of both members in the genealogy were parent–offspring pairs; although it is certainly possible for zero mismatch dyads to have more distant relationships, this observation made us slightly more inclined towards genealogies in which AA was the mother of SS and W rather than being their aunt or sister. TT was not the sister or daughter of any other group member, but she had only one mismatch with SS and three mismatches with AA, which indicates that she was probably a relative. Most likely, TT was the daughter of a female who died before the project began, and it seems likely that she was either the granddaughter or the niece of AA; it is clear that she was more distantly related to the rest of the group than the other females were, and based on physical characteristics, we think there was probably at least a 13-year age gap between TT and AA. Given these constraints, and assuming that males do not breed with their daughters (Muniz et al. 2006), there were 31 possible genealogies to consider, based on eight different matrilineal structures, and, within each of these, two to five possible paternity patterns. We present the genealogy we consider to be most probable based on the age structure of the group (Fig. 1) and report the results based on this genealogy. In most cases, the results did not vary significantly when alternative genealogies were analysed, but where alternative interpretations of the genealogies produced different results, we report multiple versions of the results. Maternities were known from observation for all females born into the group in 1990 or later, and were confirmed with genetic analysis. There were no immigrations of females during the course of the study. The identities of the females included in the sample are given in Table 2 for all years except 1999; the group composition in 1999 was identical to that of 1997 except that SS died and EE matured to adulthood. Note that there was only one grandmother in the sample.

Analyses of Kinship and Behaviour

Because females seemed not to recognize their paternal kin (see Results), we calculated the coefficient of relatedness only through the maternal line (i.e. as if there were no common paternal ancestors) to determine how average within-group relatedness affected the distribution of affiliative behaviours (Table 5, Fig. 2). That is, $r = 0.5$ for mother–daughter pairs, $r = 0.25$ for full and maternal

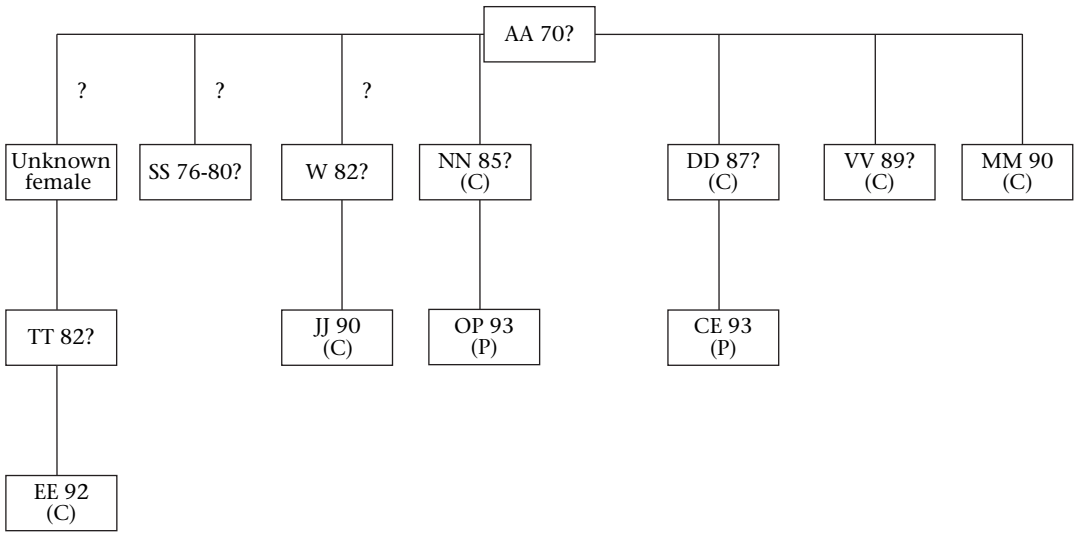

Figure 1. Genealogy of study group females. Identification codes and birth years are shown, with queries denoting estimated birth years of females born before the start of observations. Queries accompanying three genealogical links (AA–SS, AA–W, and AA–TT's mother) indicate uncertainty regarding whether dyads were mother–daughter or sister–sister (see text). Sires, when known, are indicated in parentheses beneath each ID code. Note that every female group member was related to every other female group member.

half sisters, and so forth. We averaged all dyadic coefficient of relatedness values for each observation period to assess temporal changes in within-group female–female relatedness.

We computed the mean close proximity (<1 body length) rate for each adult female–female dyad across all study periods during which that dyad was present. Also, we computed the rates of grooming (seconds per hour) for each female–female dyad. To assess the effects of kinship on proximity and grooming, we compared the values of these variables among the following kinship categories: mother–daughter, full sibling, maternal half sibling, paternal half sibling, aunt–niece, grandmother–granddaughter and nonkin (i.e. dyads with a coefficient of relatedness less than 0.125). These pairwise comparisons were conducted using resampling techniques (following Langergraber et al. 2007). Specifically, we tested the observed difference between the means of the two kinship categories against a distribution of values created by shuffling the dyadic values at random within and between the two kinship categories and computing the difference between the means of the two randomly permuted groups 10 000 times. Two-tailed asymptotic *P* values are reported. In general, there was a high degree of consistency in the results regardless of which genealogy was used (see Results, Fig. 3, Tables 3, 4). We present the results for the two possible genealogies that represent the most extreme values (i.e. the smallest difference and the largest difference between means) for each pairwise comparison of kinship categories for each of the two variables (proximity and grooming). Thus, the genealogies compared differed for each kinship category comparison (see Tables 3, 4).

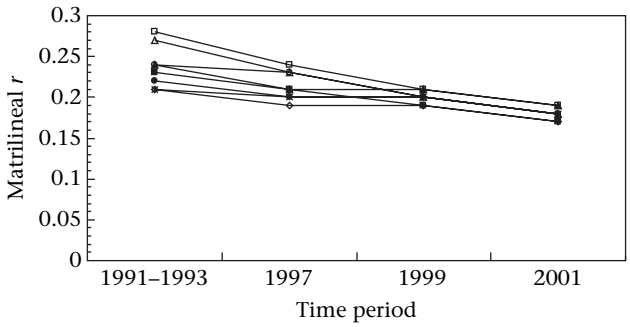

Figure 2. Changes in average dyadic matrilineal relatedness over time. Each line represents a different possible genealogy. □: G1a; △: G2a; ▲: G3a; ○: G4a; *: G5a; ●: G6a; ■: G7a; ◇: G8a.

In a second set of analyses, we used analytical techniques based on those used by Kapsalis & Berman (1996a, b), to assess the effects of group size and genealogical structure (both of which changed over the course of the study) on the relative effects of kinship and rank distance on the distributions of proximity and grooming. Briefly, we organized dyadic kinship distance scores and behavioural measures into matrices, and calculated the correlations between these matrices using Hemelrijk's (1990a, b) K_r and partial K_r tests. These tests were created to overcome the problems created by the nonindependence of data points (dyads) when the same individuals occur in multiple dyads. Use of the partial K_r tests also enabled us to assess the effects of kinship on social behaviour while controlling for the effects of dominance rank distance, which is correlated with kinship distance when dominance rank is matrilineally 'inherited' (reviewed by Kapsalis 2004).

We first analysed proximity and grooming data from each of the four observation periods separately (1991–1993, 1997, 1999 and 2001). We calculated the correlations between matrices of our behavioural measures (proximity and grooming) and two kinship models (see Table 1 for the kinship distance scoring system used). Because the results of the first set of analyses (pairwise comparisons between kinship categories) indicated that

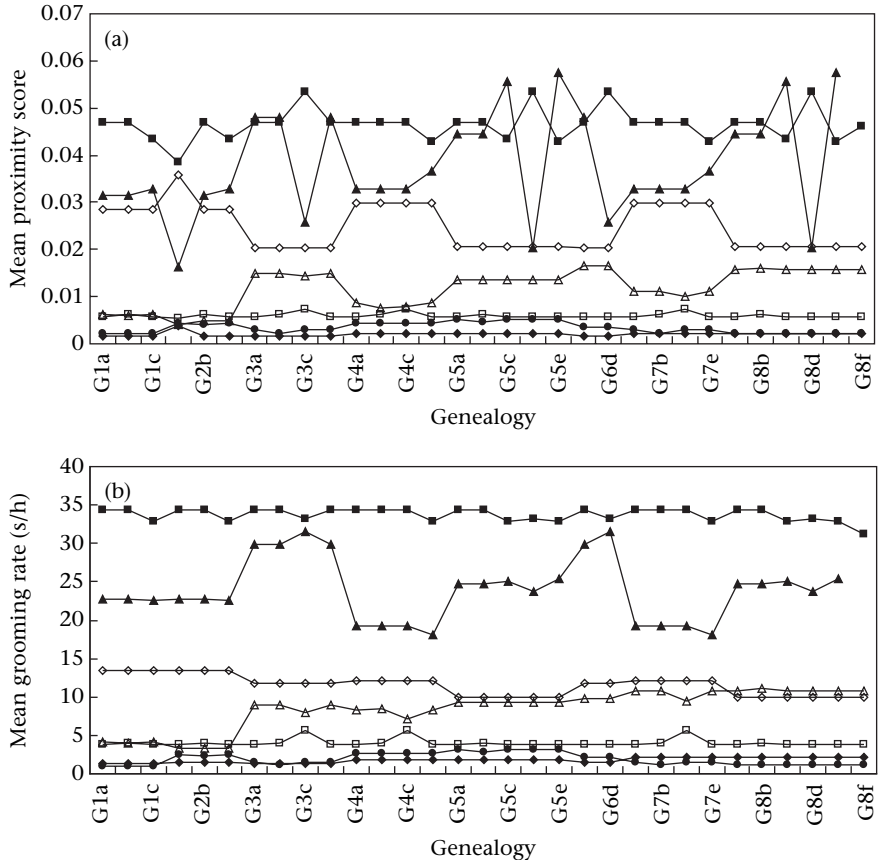

Figure 3. Differences between (a) proximity and (b) grooming scores for dyads of different relatedness categories. Each line connects the values for a different relatedness category, and each data point along the *X* axis represents a different possible genealogy. ◇: mother–daughter; ■: full sister; ▲: maternal half sister; □: paternal half sister; △: aunt–niece; ♦: grandmother–granddaughter; ●: distantly related kin. There were eight possible matrilineal genealogies (with each number representing a different one) and multiple genealogies possible for each matrilineal configuration because of differences in assumptions regarding paternities; different paternity assumptions are represented by different letters (a–f) on the *X* axis.

females do not distinguish between full sisters and maternal half sisters, or between paternal half sisters and nonkin, we did not assume that the monkeys had an awareness of paternal kinship when we designed the kinship models used in the matrix tests. Our first set of results was ambiguous regarding the ability of females to detect aunt–niece and grandmother–granddaughter relationships (see Results), so we conducted analyses using two different matrilineal kinship models. The models differed with regard to whether dyads with matrilineal relatedness 0.125 (aunt–niece and greatgrandmother–greatgranddaughter dyads) were lumped with distant kin and nonkin dyads. In both models, distant kin ($r < 0.25$ or $r < 0.125$) were lumped with more distant kin and nonkin because our data set contained very few distantly related, and no unrelated female–female dyads (see below). For tests of statistical significance, we set alpha levels using the Bonferroni correction for multiple tests of the same hypothesis (Shaffer 1995), because each statistical test was performed for multiple study periods. We present results for the most probable genealogy (see Table 5), but we also ran these tests for two other matriline possibilities that seemed likely to deviate furthest from the most probable genealogy. In one of these, aunt–niece and maternal half-sibling dyads had grooming and proximity scores greatly elevated above those in the more probable genealogies, and in the other, only aunt–niece scores were greatly elevated above those in the other genealogies. However, the general patterns in the data were consistent regardless of the genealogy used.

Table 1. Kin discrimination models and associated kin distance scoring systems (coefficients of relatedness assuming that all siblings were half siblings are given in parentheses)

	Kin discrimination model	
Score	Three-step maternal (model 1)	Four-step maternal (model 2)
4		Mother–daughter (0.5)
3	Mother–daughter (0.5)	Maternal sisters and grandmother–granddaughter (0.25)
2	Maternal sisters and grandmother–granddaughter (0.25)	Aunt–niece and greatgrandmother–greatgranddaughter (0.125)
1	All other dyads	All other dyads

When analysing the data on coalitionary aggression, we counted each triadic combination of joiner/victim/solicitor only once. For example, if A supported B against C on two occasions, we counted it only one time. There was absolute consistency in females' choices regarding which opponent to support during all study periods. We used sign tests (one-tailed *P* values) to determine whether females supported the opponent who was the closest kin, as predicted.

RESULTS

Matrilineal Relatedness and Dominance Rank

In Abby's group, as female group size increased over the 10 years of the study, mean matrilineal relatedness declined (Fig. 2, Table 5). Table 2 shows (a) each female's observed dominance rank in 1991–1993, 1997 and 2001 and (b) the rank she would be expected to hold if our subjects followed the 'youngest ascendancy' rule by which each female occupies a rank below her mother and above her next oldest sister. Using the genealogical structure we consider most likely (see above and Fig. 1), the mean difference between observed and expected rank was 1.0, 1.9, and 1.6 in 1991–1993, 1997 and 2001, respectively. The other potentially valid genealogical structures generated differences between observed and expected dominance ranks, varying from 0.67 to 3.8 ranks. There were several sources of deviation from expected ranks. In nine dyads, a female outranked her younger sister in at least one of the three study periods (according to the best supported genealogy in Fig. 1, although the precise number of these reversals varied from 4 to 11 according to genealogy and the time period selected). Several other deviations were apparent in all possible genealogies: former alpha female AA, who appeared quite decrepit by 2001, had fallen in rank below three of her daughters. Female NN, although not noticeably decrepit, was outranked by her daughter OP in 2001. The ranks of first cousins OP and CE were reversed compared to what would be expected based on their mothers' relative ages.

We also examined whether females follow the simpler maternal rank inheritance rule of having ranks similar to their mothers (but with no particular ordering according to age among maternal siblings). Small sample size prevents us from making strong statements regarding this issue: all we can do is compare the relative ranks of NN, DD, W and TT with the relative ranks of their daughters. These ranks were consistent with expectations except that in the 2001 data set, the adult daughters of DD and NN had ranks reversed from what would be expected if their ranks matched those of their mothers. Note, however, that DD and NN had experienced a rank reversal as adults, sometime in the preceding 3 years. Because females can change ranks as adults, it seems unlikely that maternal rank is a strong predictor of dominance rank in adults.

Relatedness, Proximity and Grooming

Results of the first set of analyses, comparing mean close proximity rates across different pairs of kinship categories, are shown in Fig. 3a, and Table 3. We found no significant differences between the categories of mother–daughter, full sister and maternal half sister, regardless of the genealogy used. Nor did we find significant differences between paternal half sisters and more distant female relatives ($r < 0.125$). Mother–daughter pairs had significantly higher proximity scores than did paternal half sisters or more distant kin dyads. Full sisters had higher proximity scores than paternal half sister dyads or distantly related kin dyads. Maternal half sisters had higher proximity

Table 2. Observed female dominance ranks compared to those expected under the 'younger sister ascendancy' model*

	Dominance rank			Dominance rank			Dominance rank		
ID	Study period	Expected	Observed	Study period	Expected	Observed	Study period	Expected	Observed
AA	1993	**1**	1	1997	**1**	1	2001	1	4
SS	1993	5	2	1997	7	2	2001		dead
W	1993	4	5	1997		dead	2001		dead
TT	1993	**6**	6	1997	**8**	7–8	2001	9	7
NN	1993	**3**	3	1997	5	3	2001	6	9
DD	1993	2	4	1997	**4**	4	2001	4	1
VV				1997	3	5–6	2001	3	2
MM				1997	2	5–6	2001	2	3
JJ				1997	6	7–8	2001	**8**	8
EE							2001	**10**	10
CE							2001	5	6
OP							2001	7	5
Mean rank difference†			1.0			1.9			1.6
Maximum mean rank difference for alternative genealogies‡			2.67			3.37			3.80
Minimum mean rank difference for alternative genealogies‡			0.67			1.37			1.60

*Expected ranks in bold were identical to observed ranks. This table assumes the genealogy portrayed in Fig. 1.
†Average difference between observed and expected ranks.
‡Maximum and minimum mean differences obtained from the other seven possible genealogies.

Table 3. Pairwise comparisons of proximity scores between kinship categories (sample sizes for the two categories are given in parentheses)

Kinship categories compared	*P* value (2-tailed) for most probable genealogy (1a)	*P* value (2-tailed) for genealogy with greatest difference in means between these categories	*P* value (2-tailed) for genealogy with smallest difference in means between these categories
MD/FS	0.3838 (9,6)	0.0772 (8,7)	0.3674 (9,6)
MD/MHS	0.8356 (9,7)	0.1704 (7,2)	0.8944 (7,2)
MD/PHS	0.0034 (9,10)	0.0022 (9,10)	0.0084 (8,11)
MD/AN	0.001 (9,13)	0.0012 (9,8)	0.7216 (8,13)
MD/GO	0.0028 (9,4)	0.0118 (9,3)	0.0000 (7,2)
MD/DK	0.0006 (9,7)	0.0002 (9,14)	0.0082 (7,9)
FS/MHS	0.493 (6,7)	0.3316 (7,2)	0.9298 (6,3)
FS/PHS	0.0034 (6,10)	0.0020 (7,10)	0.0036 (6,10)
FS/AN	0.002 (6,13)	0.0034 (6,8)	0.1180 (7,17)
FS/GO	0.0000 (6,4)	0.0000 (7,3)	0.0240 (6,3)
FS/DK	0.001 (6,7)	0.0002 (7,12)	0.0002 (6,14)
MHS/PHS	0.009 (7,10)	0.0306 (2,10)	0.0072 (7,10)
MHS/AN	0.0072 (7,13)	0.0858 (2,18)	0.4632 (2,17)
MHS/GO	0.0176 (7,4)	0.2050 (2,3)	0.0192 (7,3)
MHS/DK	0.0042 (7,7)	0.0254 (2,12)	0.0010 (7,14)
PHS/AN	0.8812 (10,13)	0.2046 (10,10)	0.8990 (11,13)
PHS/GO	0.3444 (10,4)	0.2372 (11,4)	0.4344 (10,3)
PHS/DK	0.3044 (10,7)	0.1096 (11,14)	0.8966 (10,9)
AN/GO	0.175 (13,4)	0.1574 (8,3)	0.4886 (8,3)
AN/DK	0.150 (13,7)	0.0142 (18,12)	0.8186 (8,14)
GO/DK	0.9292 (4,7)	0.6894 (3,9)	0.6694 (2,12)

MD: mother–daughter; FS: full sibling; MHS: maternal half sibling; PHS: paternal half sibling; AN: aunt–niece; GO, grandmother–granddaughter; DK: $r < 0.125$ (distant kin).

scores than paternal half sisters or more distant kin (see Table 3). Thus, for most comparisons, the results were consistent across genealogies. However, the genealogy used did affect apparent proximity differences between aunt–niece dyads and other kin categories. Aunt–niece dyads' proximity scores were sometimes significantly different from those of mother–daughter, full sibling or nonkin dyads, depending on which genealogy was used. Likewise, the genealogy used affected whether maternal half sisters' proximity scores differed significantly from those of grandmother–granddaughter dyads. Note, however, that the sample size for grandmother–granddaughter dyads was small (1–3 dyads, depending on the genealogy used), and that there was only one grandmother.

Results were similar for grooming (Table 4, Fig. 3b), although the status of mother–daughter dyads relative to other categories varied according to which genealogy was used. Regardless of the genealogy used, full sister dyads had significantly higher grooming rates than all other categories except for maternal half-sister dyads and, for some genealogies, mother–daughter dyads. Maternal half sisters showed significantly higher grooming rates than paternal half sisters, aunt–niece dyads, grandmother–granddaughter dyads, mother–offspring dyads and distant kin dyads, although these results were not significant for all genealogies. Grooming rates of paternal half sister, aunt–niece and grandmother–granddaughter dyads were all statistically indistinguishable from one another in all genealogies, and distant kin dyads were indistinguishable from these categories for most genealogies.

Table 5 summarizes the results of the second set of analyses, using matrix tests to assess the relationships between the three-step and four-step matrilineal kinship models (independent variables; Table 1) and proximity, grooming and aggression (dependent variables). We carried out a number of tests of the relationship between kinship and grooming and proximity across the study periods, both with and without holding rank distance constant. For four study periods, we tested two hypotheses: (1) kinship is positively correlated with grooming and (2) kinship is positively correlated with proximity. For these tests, Bonferroni correction yielded an alpha level of 0.0125. We carried out three tests each (one for each usable study period, i.e. excluding 1999) of two hypotheses: (1) rank distance is negatively correlated with grooming and (2) rank distance is negatively correlated with proximity. For these tests, Bonferroni correction yielded an alpha level of 0.0167. Also, for the three usable study periods, we tested two additional hypotheses: (1) kinship is positively correlated with grooming, holding rank distance constant and (2) kinship is positively correlated with proximity, holding rank distance constant. For these tests, Bonferroni correction yielded an alpha level of 0.0167.

Without controlling for rank distance, kinship (using either kinship model and any genealogy) was significantly positively correlated with grooming and proximity in 2001, when Abby's group was at its largest and mean female–female relatedness was at its lowest (Fig. 2); the three-step kinship model was significantly correlated with proximity in 1999 as well, regardless of the genealogy used. Controlling for rank distance, kinship was significantly correlated with proximity only in 2001, for both kinship models and all genealogies. Kinship was significantly correlated with grooming after controlling for rank distance only in 2001; this result was consistent for both kinship models and all genealogies. Because kinship

Table 4. Pairwise comparisons of grooming scores between kinship categories (sample sizes for the two categories are given in parentheses)

Kinship categories compared	*P* value (2-tailed) for most probable genealogy (1a)	*P* value (2-tailed) for genealogy with greatest difference in means between these categories	*P* value (2-tailed) for genealogy with smallest difference in means between these categories
MD/FS	0.0606 (9,6)	0.0196 (8,7)	0.0462 (9,7)
MD/MHS	0.1406 (9,7)	0.0428 (8,2)	0.4278 (8,4)
MD/PHS	0.0008 (9,10)	0.0036 (9,10)	0.0794 (8,15)
MD/AN	0.0036 (9,13)	0.0000 (9,8)	0.8728 (7,16)
MD/GO	0.0022 (9,4)	0.0022 (9,4)	0.0612 (7,2)
MD/DK	0.0000 (9,7)	0.0000 (9,7)	0.0084 (8,9)
FS/MHS	0.3942 (6,7)	0.3154 (6,5)	0.9448 (7,2)
FS/PHS	0.0008 (6,10)	0.0008 (6,10)	0.0000 (9,10)
FS/AN	0.0006 (6,13)	0.0014 (6,8)	0.0136 (9,17)
FS/GO	0.0086 (6,4)	0.0086 (6,4)	0.0384 (9,2)
FS/DK	0.0000 (6,7)	0.0000 (6,7)	0.0008 (7,9)
MHS/PHS	0.0034 (7,10)	0.0314 (2,10)	0.0600 (5,11)
MHS/AN	0.0028 (7,13)	0.0418 (2,15)	0.3758 (4,12)
MHS/GO	0.0408 (7,4)	0.1334 (2,4)	0.4106 (4,2)
MHS/DK	0.011 (7,7)	0.0346 (2,9)	0.0818 (4,9)
PHS/AN	0.8564 (10,13)	0.1102 (11,16)	0.9972 (11,12)
PHS/GO	0.3314 (10,4)	0.2452 (11,4)	0.8162 (10,2)
PHS/DK	0.1514 (10,7)	0.0490 (11,14)	0.7984 (10,9)
AN/GO	0.3526 (13,4)	0.2508 (16,2)	0.6818 (8,3)
AN/DK	0.1194 (13,7)	0.0142 (16,12)	0.6036 (8,14)
GO/DK	0.7338 (4,7)	0.4650 (2,12)	0.9570 (4,9)

MD: mother–daughter; FS: full sibling; MHS: maternal half sibling; PHS: paternal half sibling; AN: aunt–niece; GO: grandmother–granddaughter; DK: $r < 0.125$ (distant kin).

distance was not significantly correlated with rank distance in any study period, controlling for rank distance generally had little effect on the strength of correlations between kinship and affiliation measures. More closely ranked females spent significantly more time in proximity and groomed each other significantly more in 1991–1993 and 1997, but we found no association between rank distance and either affiliation measure in 2001.

Table 5. K_r test results, using genealogy 1 with the 3- and 4-step matrilineal kinship models

		Observation period			
		1991–1993	1997	1999	2001
Number of adult females		6	8	8	10
Mean matrilineal *r*		0.28	0.24	0.21	0.19
Independent variable	Dependent variable		K_r Tau *W*		
3-step kinship model	Proximity	0.217†	0.368*‡	**0.360****§	**0.417****††
4-step kinship model		0.217	0.269*‡	0.438*	**0.366****
Rank distance	Proximity	**−0.60***	**−0.52*****	—	−0.20
3-step kinship model	Proximity controlling for	0.271†	0.355*‡	—	**0.409****
4-step kinship model	rank distance	0.271†	0.290*‡		**0.373****
3-step kinship model	Grooming	0.217	0.225	0.300§	**0.388****
4-step kinship model		0.217	0.146	0.338*	**0.376****
Rank distance	Grooming	**−0.60****	**−0.60*****	—	−0.09
3-step kinship model	Grooming controlling for	0.271	0.187	—	**0.383****††
4-step kinship model	rank distance	0.271	0.152		**0.378****
3-step kinship model	Aggression per	−0.177	**0.360****§	—	0.015
4-step kinship model	unit time	−0.177	0.376*		−0.016‡‡

Values in bold indicate significance at $\alpha = 0.05$ with a Bonferroni correction. Without Bonferroni correction: *$P \leq 0.05$; **$P \leq 0.01$; ***$P < 0.001$ (one tailed).
†Association between variables slightly negative for at least one alternative genealogy.
‡Nonsignificant for at least one alternative genealogy.
§Significant at $P < 0.05$ for at least one alternative genealogy.
††Significant at $P < 0.001$ for at least one alternative genealogy.
‡‡Association between variables slightly positive for at least one alternative genealogy.

Relatedness and Coalition Formation

We examined the behavioural records of every adult female–female coalition against another adult female. These records yielded 33 distinct triads in which different females occupied the roles of solicitor, joiner and victim of the coalition. For each of these triads, we scored whether the joiner was (1) more closely matrilineally related to the solicitor than to the victim, (2) more closely matrilineally related to the victim than to the solicitor or (3) equally matrilineally related to the solicitor and the victim. There were no triads in which a female ('A') joined female 'B' against female 'C' on one occasion but joined 'C' against 'B' on a different occasion. For the most probable genealogy, the joiner was equally related to the solicitor and the victim, in 15 of the 33 triads. Of the remaining 18 triads, the joiner was more closely related to the solicitor than to the victim in 17 cases (sign test: $P = 0.0001$). Regardless of the genealogy used, the results were all in the predicted direction, but the P value ranged from 0.11 to 0.0000. Statistical significance at the $P < 0.0001$ level was obtained for four of the genealogies, and at $P < 0.05$ for one genealogy. The poorest significance levels ($P = 0.08$; $P = 0.11$) were obtained for those genealogies in which AA, SS and W were assumed to be sisters, a possibility which seems unlikely given the demographic structure of the group.

Relatedness and Aggression

After applying the Bonferroni correction (at alpha level 0.0167), there was no statistically significant association between aggression and kinship, with one exception. There was a statistically significant tendency ($P < 0.05$) in 1997 for females to direct more aggression towards more closely related females. However, in this field season, the only one of our field seasons where our sampling protocol enabled us to control for proximity, the result became nonsignificant when proximity was controlled for (K_r test: Tau $W = 0.090$ for the three-step model and 0.119 for the four-step kinship model; one-tailed P values were 0.3 and 0.4, respectively, and did not attain significance in any of the genealogies tested).

DISCUSSION

Our results reveal that the white-faced capuchins at Lomas Barbudal are more closely related to more of their fellow groupmates than what has been reported in group-living wild primates. Of our 12 female subjects, 10 were always co-resident with their mother and/or at least one adult daughter or maternal sister (primary kin) and only one was never co-resident with adult female primary kin; the subjects had an average of 2.7 such kin (range 0–5). Seven subjects always resided with at least four primary kin, and four females had as many as three full sisters with whom they regularly affiliated. Although we do not have long-term data on patterns of affiliation in adult females for our other six study groups at Lomas Barbudal for comparison with the data from Abby's group, we do know that the females in the other groups are matrilineally related, that fissions occur along matrilines, and that it is common to have many pairs of full siblings in other groups (S. Perry, L. Muniz, J. H. Manson, J. Gros-Louis, H. Gilkenson, W. Lammers & L. Vigilant, unpublished data). Table 6 summarizes the demographic characteristics of two other large groups at Lomas Barbudal (shortly before they fissioned, making them similar to Abby's group in 2001) and seven groups sampled in 2007. Abby's group during the decade for which affiliative relationships are described in this paper was somewhat large for a capuchin group at Lomas, but it is certainly not the most extreme group in the population in terms of number of primary kin and full siblings.

The demographic pattern for capuchins at Lomas Barbudal contrasts with that reported by Silk et al. (2006) for female savannah baboons, *Papio cynocephalus*, which average between one and two available female primary kin, and which are almost never co-resident with full sisters (J. B. Silk, personal communication). This high degree of relatedness among co-resident female capuchins is due partly to high female survivorship rates and partly to the unusual intensity of reproductive monopolization by alpha males, as well as to the long tenures of alpha males (Muniz et al. 2006). The longest alpha male tenure in Abby's group was 7 years, but alpha male tenures at our site can exceed 17 years. Long-term alpha males sire 79% of offspring conceived with females that

Table 6. Demographic characteristics of other capuchin groups at Lomas Barbudal

Group/year	Mean no. adult females	Mean no. primary kin (mothers, daughters, maternal sisters) (range)	Mean no. full sister dyads	Mean no. adult paternal sisters*
RR 2004†	11	3.3 (0–7)	3	3.3
FF 2004†	9	1.3 (0–3)	1	2
RR 2007†	7	2 (0–4)	3	2.4
MK 2007	4	3 (3)	3	1.5
CU 2007	2	1 (1)	n.a.	n.a.
FF 2007†	7	1.4 (0–3)	0	2
FL 2007	5	1.6 (1–2)	0	0.8
AA 2007	8	2 (0–4)	3	1.3

*Using just those younger females for which paternities were known.
†Estimates of number of primary kin and number of full siblings are conservative, because matrilineal relationships and paternity of the oldest females were unknown.

are not their own daughters (Muniz et al. 2006). One consequence of this mating system is that individuals are highly likely to have one or more full siblings in the group. During the period of this study for which paternities were known in Abby's group (1987–2001), 55% of the 110 dyads born into the same cohort (i.e. pairs of individuals less than 2 years apart in age) were paternal siblings. Thus, the availability of similar aged paternal kin was much higher than that reported for other primate species (5% in Ngogo chimpanzees, *Pan troglodytes*, 13% in Cayo rhesus monkeys, *Macaca mulatta*, and 37% for Amboseli baboons, *Papio cynocephalus*: Langergraber et al. 2007). Under such demographic circumstances, it might be expected that white-faced capuchins would have evolved a means of detecting paternal kin and favouring them. Long alpha male breeding tenures do seem to have selected for behavioural mechanisms whereby father–daughter inbreeding is avoided in this species (Muniz et al. 2006).

Given the high availability of paternally related kin, it is somewhat surprising on theoretical grounds that our results suggest weak or no effects of paternal relatedness on female–female sociality. Maternal half sister and full sister dyads showed rates of affiliation (proximity and grooming) that were statistically indistinguishable from one another, but both categories showed statistically higher rates of affiliation than paternal half sisters. Affiliation rates among paternal half sisters were statistically indistinguishable from those of distantly related female–female dyads ($r < 0.125$) for most of the possible genealogies. Either (1) the kin recognition mechanisms used by females to recognize (and avoid mating with) their own fathers (Muniz et al. 2006) do not allow them to recognize the fathers of other group members (e.g. paternal half sisters), or (2) females do recognize paternal kin but do not favour them in dispensing affiliative behaviour. In the general structuring of their social relationships, *Cebus capucinus* females resemble rhesus macaques (Widdig et al. 2001, 2006), juvenile mandrills, *Mandrillus sphinx* (Charpentier et al. 2007) and savannah baboons (Silk et al. 2006) in their preference for maternal half siblings over paternal half siblings.

Close maternal kinship was clearly recognized, and closer maternal kin were favoured over more distant kin, at least for close kin categories such as mother–daughter, maternal half sister and full sister. Confusion about the proper placement of some of the older females in the genealogy prevents a firm interpretation of the data on recognition of aunt–niece and grandmother–granddaughter dyads. The same general results held true regardless of the genealogy used (see Fig. 3), with full sister dyads having the highest rates of affiliation, followed by maternal half sister and then mother–daughter pairs. The significance levels attached to the differences between these categories, but not the general tendencies, changed according to which genealogy was assumed. Maternal half sister values did fluctuate considerably depending on the genealogy assumed, typically showing values intermediate between full sister and mother–daughter values. Mother–daughter and aunt–niece values also varied considerably depending on which genealogy was assumed, and may be quite similar or quite different depending on which genealogy is correct.

For most possible genealogies, full sibling, maternal half sibling and mother–daughter dyads were statistically indistinguishable, but those three categories had statistically higher grooming and proximity scores than grandmother–granddaughter pairs or females related by less than $r = 0.125$. Aunt–niece dyads had lower scores than full sisters and maternal half sisters, but they were most similar in value either to mother–daughter dyads, or to grandmother–granddaughter and distantly related dyads, depending on which genealogy was assumed. This and earlier work on Japanese macaques (Chapais et al. 1997, 2001) suggest that nepotism, and perhaps kin recognition, is particularly variable in aunt–niece relationships.

Matrix tests were used to test the type of kin discrimination model used by the capuchins. Because paternal kinship was apparently not recognized, only matrilineal kin discrimination models were tested in this set of analyses. The results for the three- and four-step kinship models (Table 5) were strikingly similar, regardless of the genealogy used, and therefore did not inform us about the relatedness thresholds detected by our subjects.

The pairwise comparisons of grooming and proximity rates among kinship categories (i.e. the first set of analyses) are based on values averaged across all field seasons. However, kinship bias was not evident during all time periods and seemed to vary as a function of the demographic characteristics of the group. When the group contained six to eight females, our subjects preferentially associated and groomed with females who were closer to them in the dominance hierarchy, as predicted by Seyfarth's (1977) 'attraction to rank' model. When only six females resided in the group, there was very little variation in the degree of matrilineal relatedness among them (range 0.125–0.5). Under these demographic circumstances, rank distance was a stronger determinant than kinship of the distribution of grooming and proximity. However, when group size increased to 10 females, and mean coefficient of matrilineal relatedness dropped from 0.28 to 0.19 (see Fig. 2), there was more variation in dyadic coefficients of relatedness (range 0.031–0.5), and kinship became more important than rank distance in determining interdyadic variation in proximity and grooming rates. In no study period did we find a significant correlation between kinship distance and rank distance, nor did genealogical structure closely predict the female dominance hierarchy. Even prime-aged adults sometimes fell or rose in rank relative to other adults (see also Manson et al. 1999). On the other hand, coalitional support was strongly biased towards closer kin against more distant kin, as in many primates and other group-living mammals (Silk 2002; Widdig et al. 2006). We speculate that (1) white-faced capuchin females' coalitional support decisions are kin biased, but not age biased in such a fashion as to produce adherence to the 'younger sister ascendancy rule' and/or (2) females' competitive power is based only partly on coalitional support, and partly on individual fighting ability.

It could be argued that kin groom and form alliances with one another more often simply because they spend

more time in proximity than do more distantly related individuals, and not because there is selection for kin to treat one another benignly. If that were true, then we would expect to find elevated rates of aggression among kin compared to nonkin as well as elevated rates of affiliation. In primates generally, aggression rates among maternal kin are as high as, or higher than, aggression rates among members of different matrilines (Silk 2002). We found no consistent direction to the relationship between kin distance and aggression rates, whether or not we controlled for time spent in proximity. This result suggests that the kin-biased distribution of grooming and coalitionary support is a product of selection for specifically benign dispositions towards females recognized as close kin.

Acknowledgments

For permission to work in the study area, we thank the Costa Rican Ministerio de Ambiente y Energía, the Area de Conservación Tempisque (ACT), the community of San Ramón de Bagaces, Rancho Jojoba/Brin D'Amour and Hacienda Pelon de la Bajura. Assistance in behavioural data collection was provided by L. Sirot, J. Anderson, A. Fuentes and H. Gilkenson. Funding was provided by the Max Planck Society, the L.S.B. Leakey Foundation, the National Science Foundation (a graduate fellowship, a NATO postdoctoral fellowship, no. 9633991, and a POWRE grant, no. SBR-9870429), the Wenner-Gren Foundation, the National Geographic Society, the University of California, Los Angeles (UCLA) Academic Senate, the Rackham (University of Michigan) Graduate School, the Evolution and Human Behaviour Program, the University of Michigan Alumnae Society, the Killam Trust, Sigma Xi, the American Psychological Association and an SDE-GWIS Vessa Notchev Fellowship. Any opinions, findings and conclusions or recommendations expressed in this material are our own and do not necessarily reflect the views of our funding agencies. K. Langergraber, B. Chapais and an anonymous referee provided helpful comments on the manuscript, and J. Mitani and the UCLA statistical consulting laboratory provided valuable statistical assistance.

References

Alberts, S. C. 1999. Paternal kin discrimination in wild baboons. *Proceedings of the Royal Society of London, Series B*, **266**, 1501–1506.

Altmann, J. 1979. Age cohorts as paternal sibships. *Behavioral Ecology and Sociobiology*, **6**, 161–164.

Bernstein, I. S. 1991. The correlation between kinship and behaviour in non-human primates. In: *Kin Recognition* (Ed. by P. G. Hepper), pp. 6–29. Cambridge: Cambridge University Press.

Chapais, B. 2001. Primate nepotism: what is the explanatory value of kin selection? *International Journal of Primatology*, **22**, 203–229.

Chapais, B. 2006. Kinship, competence and cooperation in primates. In: *Cooperation in Primates and Humans: Mechanisms and Evolution* (Ed. by P. M. Kappeler & C. P. van Schaik), pp. 47–66. Berlin: Springer-Verlag.

Chapais, B. & Bélisle, P. 2004. Constraints on kin selection in primate groups. In: *Kinship and Behavior in Primates* (Ed. by B. Chapais & C. M. Berman), pp. 365–386. Oxford: Oxford University Press.

Chapais, B. & Berman, C. M. (Eds) 2004. *Kinship and Behavior in Primates.* Oxford: Oxford University Press.

Chapais, B., Gauthier, C., Prud'homme, J. & Vasey, P. 1997. Relatedness threshold for nepotism in Japanese macaques. *Animal Behaviour*, **53**, 1089–1101.

Chapais, B., Savard, L. & Gauthier, C. 2001. Kin selection and the distribution of altruism in relation to degree of kinship in Japanese macaques (*Macaca fuscata*). *Behavioral Ecology and Sociobiology*, **49**, 493–502.

Charpentier, M. J. E., Peignot, P., Hossaert-McKey, M. & Wickings, E. J. 2007. Kin discrimination in juvenile mandrills, *Mandrillus sphinx*. *Animal Behaviour*, **73**, 37–45.

Corradini, P., Recabarren, M., Serron-Ferrer, M. & Parraguez, V. H. 1998. Study of prenatal growth in the capuchin monkey (*Cebus apella*) by ultrasound. *Journal of Medical Primatology*, **27**, 287–292.

Csilléry, K., Johnson, T., Beraldi, D., Clutton-Brock, T., Coltman, D., Hansson, B., Spong, G. & Pemberton, J. M. 2006. *Genetics*, **173**, 2091–2101.

Datta, S. B. & Beauchamp, G. 1991. Effects of group demography on dominance relationships among female primates. I. Mother–daughter and sister–sister relations. *American Naturalist*, **138**, 201–226.

Di Fiore, A. & Rendall, D. 1994. Evolution of social organization: a reappraisal for primates by using phylogenetic methods. *Proceedings of the National Academy of Sciences, U.S.A.*, **91**, 9941–9945.

Erhart, E., Coelho, A. & Bramblett, C. 1997. Kin recognition by paternal half-siblings in captive *Papio cynocephalus*. *American Journal of Primatology*, **43**, 147–157.

Fedigan, L. 1993. Sex differences and intersexual relations in adult white-faced capuchins (*Cebus capucinus*). *International Journal of Primatology*, **14**, 853–877.

Fragaszy, D. M., Visalberghi, E. & Fedigan, L. M. 2004. *The Complete Capuchin.* Cambridge: Cambridge University Press.

Frankie, G. W., Vinston, S. B., Newstrom, L. E. & Barthell, J. F. 1988. Nest site and habitat preferences of *Centris* bees in the Costa Rican dry forest. *Biotropica*, **20**, 301–310.

Gouzoules, S. & Gouzoules, H. 1987. Kinship. In: *Primate Societies* (Ed. by B. B. Smuts, D. L. Cheney, R. M. Seyfarth, R. Wrangham & T. T. Struhsaker), pp. 299–305. Chicago: University of Chicago Press.

Hamilton, W. D. 1964. The genetical evolution of social behavior. *Journal of Theoretical Biology*, **7**, 1–51.

Hartwig, W. C. 1996. Perinatal life history traits in New World monkeys. *American Journal of Primatology*, **40**, 99–130.

Heitor, F., do Mar Oom, M. & Vicente, L. 2006. Social relationships in a herd of Sorraia horses Part II. Factors affecting affiliative relationships and sexual behaviours. *Behavioural Processes*, **73**, 231–239.

Hemelrijk, C. K. 1990a. A matrix partial correlation test used in investigations of reciprocity and other social interaction patterns at a group level. *Journal of Theoretical Biology*, **143**, 405–420.

Hemelrijk, C. K. 1990b. Models of, and tests for, reciprocity, unidirectional and other social interaction patterns at a group level. *Animal Behaviour*, **39**, 1013–1029.

Holekamp, K. E., Cooper, S. M., Katona, C. I., Berry, N. A., Frank, L. G. & Smale, L. 1997. Patterns of association among female spotted hyenas (*Crocuta crocuta*). *Journal of Mammalogy*, **78**, 55–64.

Holmes, W. G. & Sherman, P. W. 1982. The ontogeny of kin recognition in two species of ground squirrels. *American Zoologist*, **22**, 491–517.

Jack, K. M. & Fedigan, L. M. 2004. Male dispersal patterns in white-faced capuchins, *Cebus capucinus*. Part 1: patterns and causes of natal emigration. *Animal Behaviour*, **67**, 761–769.

Kapsalis, E. 2004. Matrilineal kinship and primate behavior. In: *Kinship and Behavior in Primates* (Ed. by B. Chapais & C. M. Berman), pp. 153–176. Oxford: Oxford University Press.

Kapsalis, E. & Berman, C. M. 1996a. Models of affiliative relationships among free-ranging rhesus monkeys (*Macaca mulatta*): II. Testing predictions for three hypothesized organizing principles. *Behaviour*, **133**, 1235–1263.

Kapsalis, E. & Berman, C. M. 1996b. Models of affiliative relationships among free-ranging rhesus monkeys (*Macaca mulatta*): I. Criteria for kinship. *Behaviour*, **133**, 1209–1234.

Langergraber, K. E., Mitani, J. C. & Vigilant, L. 2007. The limited impact of kinship on cooperation in wild chimpanzees. *Proceedings of the National Academy of Sciences, U.S.A.*, **104**, 7786–7790.

MacKinnon, K.C. 2002. Social development of wild white-faced capuchin monkeys (*Cebus capucinus*) in Costa Rica: an examination of social interactions between immatures and adult males. Ph.D. thesis, University of California.

Manson, J. H., Perry, S. & Stahl, D. 2005. Reconciliation in wild white-faced capuchins (*Cebus capucinus*). *American Journal of Primatology*, **65**, 205–219.

Manson, J. H., Rose, L. M., Perry, S. & Gros-Louis, J. 1999. Dynamics of female–female relationships in wild *Cebus capucinus*: data from two Costa Rican sites. *International Journal of Primatology*, **20**, 679–706.

Marshall, T. C., Slate, J., Kruuk, L. E. B. & Pemberton, J. M. 1998. Statistical confidence for likelihood-based paternity inference in natural populations. *Molecular Ecology*, **7**, 639–655.

Mateo, J. M. 2002. Kin-recognition abilities and nepotism as a function of sociality. *Proceedings of the Royal Society of London, Series B*, **269**, 721–727.

Morin, P. A., Chambers, K. E., Boesch, C. & Vigilant, L. 2001. Quantitative PCR analysis of DNA from non-invasive samples for accurate microsatellite genotyping of wild chimpanzees (*Pan troglodytes verus*). *Molecular Ecology*, **10**, 1835–1844.

Muniz, L., Perry, S., Manson, J. H., Gilkenson, H., Gros-Louis, J. & Vigilant, L. 2006. Father–daughter inbreeding avoidance in a wild primate population. *Current Biology*, **16**, R156–R157.

Nsubuga, A. M., Robbins, M. M., Roeder, A. D., Morin, P. A., Boesch, C. & Vigilant, L. 2004. Factors affecting the amount of genomic DNA extracted from ape faeces and the identification of an improved sample storage method. *Molecular Ecology*, **13**, 2089–2094.

O'Brien, T. G. 1993a. Allogrooming behaviour among adult female wedge-capped capuchin monkeys. *Animal Behaviour*, **46**, 499–510.

O'Brien, T. G. 1993b. Asymmetries in grooming interactions between juvenile and adult female wedge-capped capuchin monkeys. *Animal Behaviour*, **46**, 929–938.

O'Brien, T. G. & Robinson, J. G. 1993. Stability of social relationships in female wedge-capped capuchin monkeys. In: *Juvenile Primates* (Ed. by M. E. Pereira & L. A. Fairbanks), pp. 197–210. Oxford: Oxford University Press.

Oppenheimer, J. R. & Oppenheimer, E. C. 1973. Preliminary observations of *Cebus nigrivittatus* (Primates: Cebidae) on the *Venezuelan llanos*. *Folia Primatologica*, **19**, 409–436.

Perry, S. 1995. Social relationships in wild white-faced capuchin monkeys, *Cebus capucinus*. Ph.D. thesis, University of Michigan.

Perry, S. 1996. Female–female social relationships in wild white-faced capuchin monkeys, *Cebus capucinus*. *American Journal of Primatology*, **40**, 167–182.

Rendall, D. 2004. ''Recognizing'' kin: mechanisms, media, minds, modules, and muddles. In: *Kinship and Behavior in Primates* (Ed. by B. Chapais & C. M. Berman), pp. 295–316. Oxford: Oxford University Press.

Sackett, G. P. & Frederickson, W. T. 1987. Social preferences by pigtailed macaques: familiarity versus degree and type of kinship. *Animal Behaviour*, **35**, 603–606.

Seyfarth, R. M. 1977. A model of social grooming among adult female monkeys. *Journal of Theoretical Biology*, **65**, 671–698.

Shaffer, J. P. 1995. Multiple hypothesis testing. *Annual Review of Psychology*, **46**, 561–584.

Sherman, P. W. 1977. Nepotism and the evolution of alarm calls. *Science*, **197**, 1246–1253.

Silk, J. B. 2002. Kin selection in primate groups. *International Journal of Primatology*, **23**, 849–875.

Silk, J. B., Altmann, J. & Alberts, S. 2006. Social relationships among adult female baboons (*Papio cynocephalus*) I: variation in the strength of social bonds. *Behavioral Ecology and Sociobiology*, **61**, 183–195.

Smith, K., Alberts, S. & Altmann, J. 2003. Wild female baboons bias their social behaviour towards paternal half-sisters. *Proceedings of the Royal Society of London, Series B*, **270**, 503–510.

Strier, K. B. 1994. Myth of the typical primate. *Yearbook of Physical Anthropology*, **37**, 233–271.

de Waal, F. B. 1991. Rank distance as a central feature of rhesus monkey social organization: a sociometric analysis. *Animal Behaviour*, **41**, 383–395.

de Waal, F. B. M. & Tyack, P. 2003. *Animal Social Complexity*. Cambridge, Massachusetts: Harvard University Press.

Wahaj, S. A., Van Horn, R. C., Van Horn, T. L., Dreyer, R., Hilgris, R., Schwarz, J. & Holekamp, K. E. 2004. Kin discrimination in the spotted hyena (*Crocuta crocuta*): nepotism among siblings. *Behavioral Ecology and Sociobiology*, **56**, 237–247.

Widdig, A., Nurnberg, P., Krawczak, M., Streich, W. J. & Bercovitch, F. B. 2001. Paternal relatedness and age proximity regulate social relationships among adult female rhesus macaques. *Proceedings of the National Academy of Sciences, U.S.A.*, **98**, 13769–13773.

Widdig, A., Nurnberg, P., Krawczak, M., Streich, W. J. & Bercovitch, F. 2002. Affiliation and aggression among adult female rhesus macaques: a genetic analysis of paternal cohorts. *Behaviour*, **139**, 371–391.

Widdig, A., Streich, W. J., Nurnberg, P., Croucher, P. J. P., Bercovitch, F. B. & Krawczak, M. 2006. Paternal kin bias in the agonistic interventions of adult female rhesus macaques (*Macaca mulatta*). *Behavioral Ecology and Sociobiology*, **61**, 205–214.

Wu, H. M. H., Holmes, W. G., Medina, S. R. & Sackett, G. P. 1980. Kin preference in infant *Macaca nemestrina*. *Nature*, **285**, 225–227.